TOA

PENDANT SPEAKER

PE-154EN-BK Q

The PE-154EN is certified according to the European Standard EN 54-24: 2008 and the International Standard ISO 7240-24: 2010. **DoP Number is 20-002.**

■DESCRIPTION

The **PE-154EN-BK** is the voice alarm certification product.
2 way speaker system is suitable for announcement and music use in wide frequency range.
Stylish and outstanding design inspired by the finest lighting fixtures.
A directly attached sturdy suspension cable is extendable up to 5 meters.

■SPECIFICATIONS

Rated Noise Power	15 W (100 V line), 7.5 W (70 V line)
Rated Impedance	100 V line: 670 Ω (15 W), 1 kΩ (10 W), 2 kΩ (5 W) 70 V line: 670 Ω (7.5 W), 1 kΩ (5 W), 2 kΩ (2.5 W)
Sensitivity	91 dB (1 W, 1 m) (500 Hz – 5 kHz, pink noise) 87 dB (1 W, 1 m) (100 Hz – 10 kHz, pink noise) 75 dB (1 W, 4 m) (100 Hz – 10 kHz, pink noise)
Maximum Sound Pressure Level	99 dB (15 W, 1 m) (100 Hz – 10 kHz, pink noise) 87 dB (15 W, 4 m) (100 Hz – 10 kHz, pink noise)
Frequency Response	70 Hz – 20 kHz
Coverage Angle	Horizontal and Vertical: 360° (500 Hz), 170° (1 kHz), 90° (2 kHz), 70° (4 kHz)
Environmental Type	A (indoor applications)
Speaker Component	Low frequency: 12 cm (5") cone-type High frequency: 2.5 cm (1") balanced dome tweeter
Operating Temperature	−10 °C to +50 °C (14 °F to 122 °F)
Speaker Mounting Method	Ceiling suspension
Speaker Cable	2-core cable 5 m (16.40 ft)
Applicable Cable Size	Outer diameter: ø6.5–12.5 mm Conductor: Solid wire or 7-core wire No bridge connection: 0.8 – 10 mm² (AWG18–AWG7) for solid wire, 0.8 – 8 mm² (AWG18–AWG8) for 7-core wire Bridge connection: 0.8 – 2.5 mm² (AWG18–AWG13) for solid wire, 0.8 – 1.5 mm² (AWG18–AWG15) for 7-core wire
Cable Connection	Screw terminal (steatite), can be bridge-connected
Finish	Enclosure: HIPS resin, **black** Grille: Surface-treated steel plate net, **black** paint
Dimensions	ø186 × 251 (H) mm (ø7.32" × 9.88") (speaker only)
Weight	2.1 kg (4.63 lb) (speaker only)
Accessory	Ceiling bracket…1, Mounting hanger…1, Ceiling cover…1, Ceiling bracket mounting screw (tapping screw 4 x 16)…4

■APPEARANCE

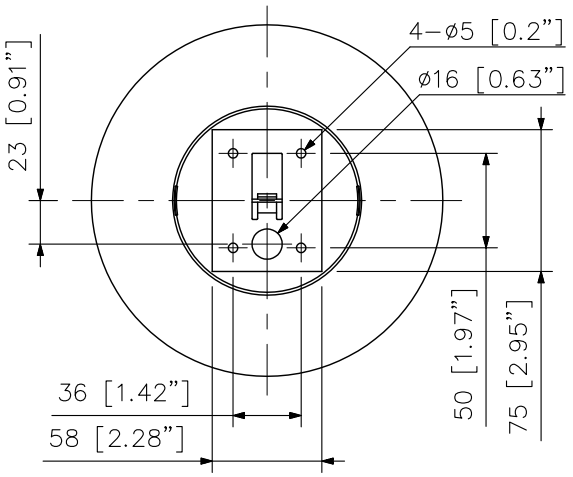

Top View

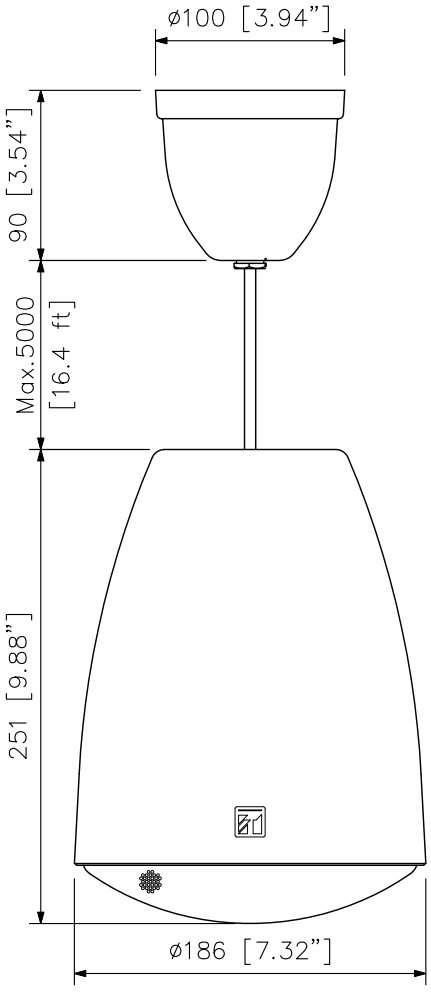

Front View

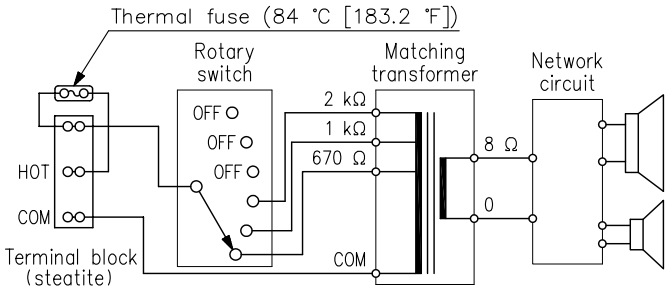

(Factory−preset wiring)

Wiring Diagram

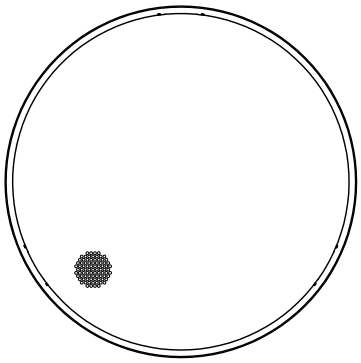

Bottom View

UNIT: mm SCALE: 1/4