LC4-UC06E Ceiling loudspeaker, 6W, wide angle



- Innovative CosCone full range driver
- Excellent speech and music reproduction
- Unrivalled opening angle for all octave frequencies
- Paintable grille
- EN 54-24, UL2043, UL1480 certified

The LC4-UC06E is a compact and high-performance ceiling loudspeaker designed for indoor public address applications requiring clear speech and quality music reproduction. Featuring Bosch's innovative CosCone full-range driver, this 6-watt model delivers a wide and uniform sound dispersion across all octave frequencies, minimizing high-frequency beaming and ensuring consistent audio coverage. Its lightweight design, paintable grille, and EN 54-24 certification make it ideal for discreet installations in various ceiling environments. With fewer units needed to cover large areas, the LC4-UC06E offers an efficient and reliable solution for commercial and emergency communication systems.

Regulatory information

All Bosch loudspeakers are designed to withstand operating at their rated power for 100 hours in accordance with IEC 268-5 Power Handling Capacity (PHC) standards. Bosch has also developed the Simulated Acoustical Feedback Exposure (SAFE) test to demonstrate that they can withstand two times their rated power for short durations. This ensures extra reliability under extreme conditions, leading to higher customer satisfaction, longer operating life, and much less chance of failure or performance deterioration.
The LC4 range has UL1480F certification listed for use in Fire Alarm and/or Emergency Communication Systems.

Safety	According to EN 60065
Water and dust protected *	According to EN 60529 IP 21
Emergency *	According to BS 5839 part 8 According to EN 54-24
UL listed *	1480 / 2043

* With LC4-CBB back-box or LC4-MFD fire-dome

Installation/configuration notes

The LC4 range is very installation friendly. A cutting template is supplied with each unit, and the loudspeaker is secured in ceilings up to 50 mm (2 in) thick using two integral screw driven clamps. Connections are made using a screw terminal block on the frame, where each incoming and outgoing conductor of the same potential can be connected to a separate screw on a terminal block. Power tapping on both 70 V and 100 V allows selection of full-power, half-power, quarter-power, eight-power radiation and 8 Ohm. A selector at the front of the frame simplifies the required selection of the power setting. The loudspeaker grille, standard supplied, can be secured to the loudspeaker unit with a quick bayonet fitting after installation of the loudspeaker into the ceiling. The optional back-box (LC4-CBB), protects the rear of the loudspeaker from dust, falling objects, makes the unit vermin proof and prevents sound traveling via the ceiling cavity to adjacent areas. The back-box is assembled with the loudspeaker by means of a snap-in construction and has knock-out holes for two grommets (11.5 mm) and for two cable glands (20.5 mm) aside and on the top. Ease of installation for individual loudspeaker and loudspeaker / fire-dome combinations. The metal fire-dome (LC4-MFD) mounting is fixed in the ceiling prior to the ceiling speaker mounting.

The fire-dome is provided with a safety cord allowing the installer to temporarily hang the loudspeaker in the fire-dome, while connecting. Connections are made using an innovative ceramic screw terminal connector on top of the metal fire-dome with loop-through facility. The loudspeaker has a provision also for adding a capacitor in case the loudspeaker is used in systems with DC supervision.

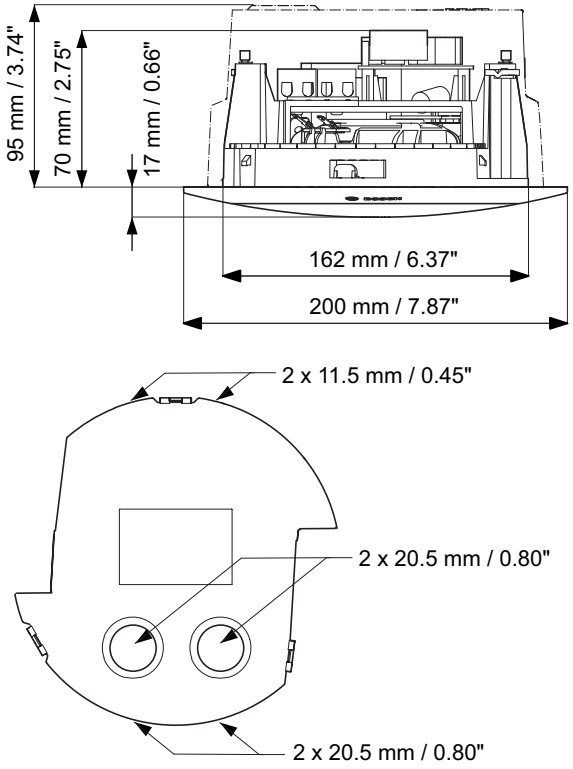

Fig. 1: Dimensions LC4-UC06E and LC4-CBB



Fig. 2: Rear view LC4-UC06E, including LC4-CBB



Fig. 3: Rear view LC4-UC06E, including LC4-MFD (showing the ceramic connector)

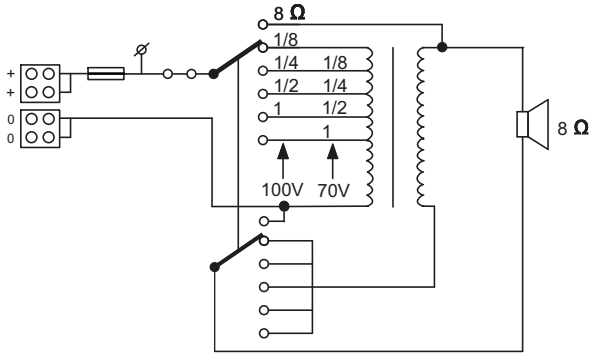

Fig. 4: Circuit diagram

Parts included

Quantity	Component
1	LC4-UC06E Ceiling Loudspeaker
1	Installation Instruction
1	Ceiling cut-out template

Technical specifications

Electrical*

Maximum power (W)	9 W
Rated power (W)	6 W
Transformer taps 6.93 V line	6 W

Transformer taps 70 V line	6 W; 3 W; 1.5 W; 0.75 W
Transformer taps 100 V line	6 W; 3 W; 1.5 W; 0.75 W
Rated impedance 6.93 V line (Ω)	8 Ω @6 W
Rated impedance 70 V line (Ω)	835 Ω @6 W
	1667 Ω @3 W
	3333 Ω @1.5 W
	6667 Ω @0.75 W
Rated impedance 100 V line (Ω)	1667 Ω @6 W
	3333 Ω @3 W
	6667 Ω @1.5 W
	13333 Ω @0.75 W
LC4-UC06E + LC4-CBB	
Sensitivity (1 W, 1 m, 1 kHz octave) (dB)	87 dB
Sensitivity (1 W, 4 m, 100 Hz - 10 kHz) (dB), acc.EN54-24	76 dB
Sound pressure level (rated power, 1 m, 1 kHz octave) (dB)	95 dB
Sound pressure level (rated power, 4 m, 100 Hz - 10 kHz) (dB), acc.EN54-24	84 dB
Frequency range (-10 dB) (Hz)	82 Hz – 20,000 Hz
Coverage angle HxV (-6 dB, 500 Hz) (°)	180° x 180°
Coverage angle HxV (-6 dB, 1 kHz) (°)	180° x 180°
Coverage angle HxV (-6 dB, 2 kHz) (°)	180° x 180°
Coverage angle HxV (-6 dB, 4 kHz) (°)	80° x 80°
LC4-UC06E + LC4-MFD	
Sensitivity (1 W, 1 m, 1 kHz octave) (dB)	87 dB
Sensitivity (1 W, 4 m, 100 Hz - 10 kHz) (dB), acc.EN54-24	75 dB
Sound pressure level (rated power, 1 m, 1 kHz octave) (dB)	95 dB
Sound pressure level (rated power, 4 m, 100 Hz - 10 kHz) (dB), acc.EN54-24	82 dB
Frequency range (-10 dB) (Hz)	130 Hz - 20,000 Hz
Coverage angle HxV (-6 dB, 500 Hz) (°)	180° x 180°
Coverage angle HxV (-6 dB, 1 kHz) (°)	180° x 180°
Coverage angle HxV (-6 dB, 2 kHz) (°)	160° x 160°
Coverage angle HxV (-6 dB, 4 kHz) (°)	80° x 80°

* Technical performance according to IEC 60268-5

Note:

- The specification data was measured in an anechoic chamber, mounted in an IEC-baffle.
- The reference plane is on the grille surface and perpendicular to the reference axis.
- The reference axis is perpendicular to the center point of the front grille surface.
- The horizontal plane contains the reference axis and is perpendicular to the reference plane.

LC4-UC06E + LC4-CBB

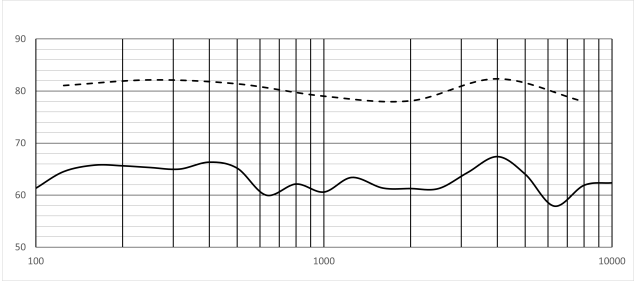

Fig. 5: Frequency response graph (— 1/3rd octave dB SPL @1 W (100 Hz — 10 kHz), 4 m; -- 1/1th octave dB SPL @1 W (100 Hz — 10 kHz), 1 m).

(1/3)rd octave band	dB SPL at 4 m
100	61.3
125	64.5
160	65.8
200	65.6
250	65.3
315	65.0
400	66.3
500	65.2
630	60.0
800	62.1
1000	60.6
1250	63.4

(1/3)rd octave band	dB SPL at 4 m
1600	61.4
2000	61.3
2500	61.3
3150	64.3
4000	67.4
5000	64.0
6300	57.9
8000	61.9
10000	62.4

(1/1)th octave band	dB SPL at 1 m
125	81.1
250	82.1
500	81.4
1000	79
2000	78.1
4000	82.3
8000	77.9

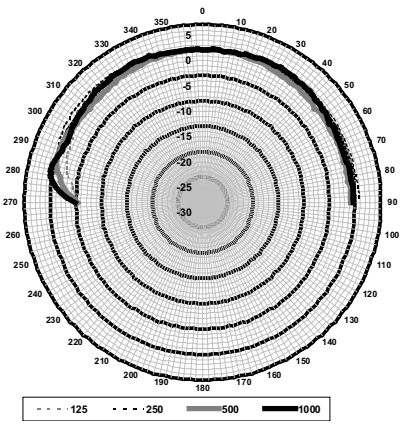

Fig. 6: Horizontal/vertical polar diagram (low frequency). Normalized at 0-degrees axis.

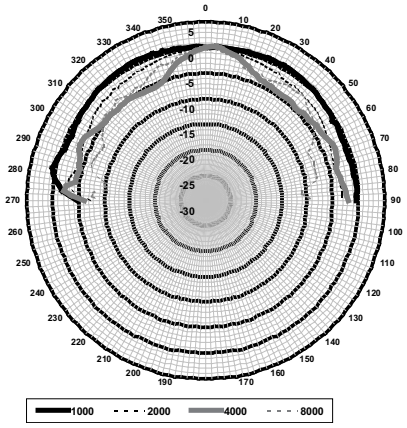

Fig. 7: Horizontal/vertical polar diagram (high frequency). Normalized at 0-degrees axis.

Mechanical

Diameter	200 mm (7.87 in)
Mounting cut-out	162 mm (6.38 in)
Min./Max. ceiling thickness	5 mm - 50 mm (0.19 in - 1.97 in)
Maximum depth	70 mm (2.75 in)
Material (loudspeaker)	ABS (V 0)
Material (front grille)	Steel mesh with ABS (V 0) rim
Weight	800 g (1.77 lb)
Color (loudspeaker)	Black (RAL 9011)
Color (front grille)	White (RAL 9003)

Environmental

Operating temperature	-25 °C - 55 °C (-13 °F - 131 °F)
Storage and operating temperature	-40 °C - 70 °C (-40 °F - 158 °F)
Relative humidity	<95%

CE
1438

Bosch Security Systems BV
Torenallee 49, 5617 BA Eindhoven, the Netherlands
13
1438/CPD/0321

EN 54-24:2008

Loudspeaker for voice alarm systems
for fire detection and fire alarm systems for buildings

Ceiling Loudspeaker LC4-UC06E, LC4-UC12E, LC4-UC24E and accessories LC4-CBB, LC4-MFD
Type A

DoP: No. EC DoP EN54-24 LC4-UCxxE

Ordering information

LC4-UC06E Ceiling loudspeaker, 6W, wide angle
Ceiling loudspeaker 6 W, wide-opening angle for all octave frequencies, separate ABS grille with metal grille, two screw-driven clamp ceiling mounting, EN54-24 certified, white RAL 9003.
Order number **LC4-UC06E | F.01U.217.140**

https://www.boschsecurity.com

© Bosch Security Systems 2025