DHI-VTO6631QB-WP

IP & Wi-Fi Villa Door Station



- Ultra-thin frame design.
- 5-inch IPS screen with a high resolution of 720 × 1280.
- 2 MP wide angle camera with H: 119°, V: 66° and D: 142° FOV.
- Unlocks through IC and ID cards, Bluetooth cards, face and password.
- Supports 20,000 users, 20,000 faces, 20,000 passwords, 100,000 IC and ID cards, 20,000 Bluetooth cards and 200,000 records.
- Recognizes faces 0.3 to 2 m away (0.98 to 6.56 ft), and has a face recognition accuracy rate of 99.9% and a one to many identification time of 0.2 sec per face.
- The theme can be personalized, making it suitable for a wide variety of scenes.
- Provides power to the card reader and electromagnetic lock, offering max 12 V, 0.5 A through PoE, and 12 V, 1.5 A through an adapter.
- IP65 rated (Silicone sealant is required for the flush mount plate).
- TCP/IP and Wi-Fi connection.
- PoE power supply.

Scene

Ideal for use in multiple scenes such as villa, apartment, office buildings, compound buildings, communities, etc.

Technical Specification

System

Main Processor	Embedded Processor
Operating System	Embedded Linux
Button Type	Mechanical
Number of Buttons	1
Interoperability	ONVIF;CGI
Network Protocol	RTSP;DNS;FTP;RTP;RTMP;SIP;SSH;HTTP/HTTPS;ONVIF

Basic

Screen Type	Capacitive touch screen
Display Screen	5-inch display screen
Screen Resolution	720 (H) × 1280 (V)
Camera	1/2.8" 2 MP CMOS high-definition, low illumination, dual cameras
Field of View	H: 119°; V: 66°; D: 142°
WDR	120 dB
Noise Reduction	3D NR
Video Compression	H.264;H.265
Video Resolution	Main stream: 720p, D1, WVGA, CIF; Sub stream: 1080p, 720p, D1, WVGA, CIF, QVGA
Video Frame Rate	PAL: 25 fps; NTSC: 30 fps



Video Bit Rate	256 kbps–4096 kbps
Light Compensation	Auto IR
Audio Compression	G.711a; G.711u; PCM
Audio Input	1 channel
Audio Output	Built-in speaker
Audio Mode	Two-way audio
Audio Enhancement	Echo suppression/digital noise reduction
Audio Bit Rate	16 kHz, 16 bit

Function

Communication Mode	Full digital
Verification Method	Card;Password;QR Code;Face Recognition;Bluetooth
Frequency Range	2400-2483.5 MHz
Max. Transmission Power	CE EIRP: ≤20 dBm@2400-2483.5 MHz
Bluetooth	Yes
Bluetooth Standard	BLE (Bluetooth mode), BT5.2 (Bluetooth version)
Auto Snapshot	Yes
Information Release	Receive and view text and image information released by the management center

Elevator Control	Residents and visitors can call elevators. Permissions can also be granted to access floors through access control.
Leave Videos	Yes (SD card inserted in VTO is needed)
Storage	Supports micro SD card storage (up to 128 GB)
Web Configuration	Yes
Auto Registration	Yes

RFID

Card Type	IC card;ID card
Modulation Type	ASK
Frequency Range	IC:13.56 MHz; ID:125 kHz
Max. Transmission Power	IC: 42 dBuA/m@10 m; ID: 66 dBuA/m@10 m

Network

Max. Transmission Power	≤20 dBm@2400-2483.5 MHz
Wi-Fi	Yes
Wireless Standard	IEEE 802.11b/g/n
Wireless Frequency Range	2.4 GHz

Performance

Card Reading Distance	0 cm–3 cm (0.00"–1.18")
Face Recognition Height Range	1.2 m–2.0 m (3.94 ft–6.56 ft)
Face Recognition Distance	0.3 m–2.0 m (0.98 ft–6.56 ft)
Face Recognition Accuracy	99.9%
Face Recognition Time	0.2 s
Casing Material	Tempered glass;PC + ABS

Capacity

Card Capacity	100,000
Face Image Capacity	20,000
User Capacity	20,000

Port

RS-485	1 channel
Wiegand	1 channel
Alarm Input	2 channels
Alarm Output	1 channel
Power Output	Max 12 V, 1.5 A through an adapter Max 12 V, 0.5 A through PoE
Exit Button	1 channel
Door Status Detection	1 channel
Lock Control	1 channel, open by default
Network Port	1 × 10 Mbps/100 Mbps Ethernet port

Alarm

Tamper Alarm	Yes

General

Appearance Color	Dark Silver
Power Supply	12 VDC, 3 A; Standard PoE
Power Adapter	Optional
Installation	Surface mount
Certifications	CE
Accessory	Power supply (optional); Surface Mounted (standard)
Product Dimensions	186.8 mm × 81.4 mm × 23.3 mm (7.35" × 3.20" × 0.92") (H × W × D)
Protection	IP65 rated (Silicone sealant is required)
Operating Temperature	–30 °C to +60 °C (–22 °F to +140 °F)
Operating Humidity	0%–90% (RH), non-condensing
Operating Environment	Outdoor
Operating Altitude	0 m–1,300 m (0 ft–4,265.09 ft)
Power Consumption	≤8 W (standby), ≤10 W (working). These two values of power consumption do not contain the output power
Gross Weight	0.64 kg (1.41 lb)
Storage Temperature	–20 °C to +70 °C (–4 °F to +158 °F)
Storage Humidity	30%–75% (RH)

Ordering Information

Type	Model	Description
Wi-Fi Villa Door Station	DHI-VTO6631QB-WP	IP & Wi-Fi Villa Door Station

Installation

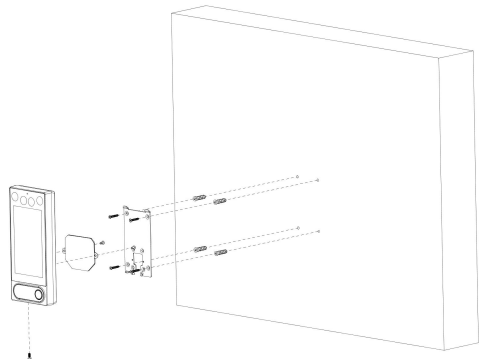

Dimensions (mm[inch])

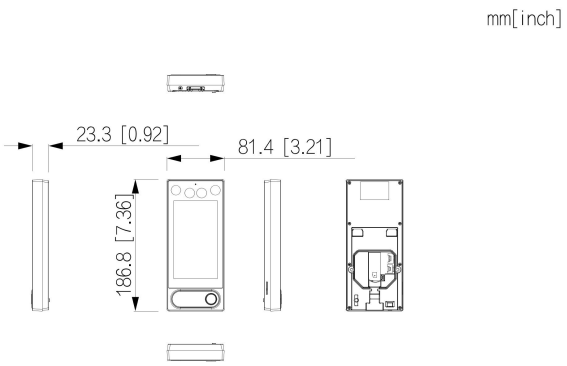

Application

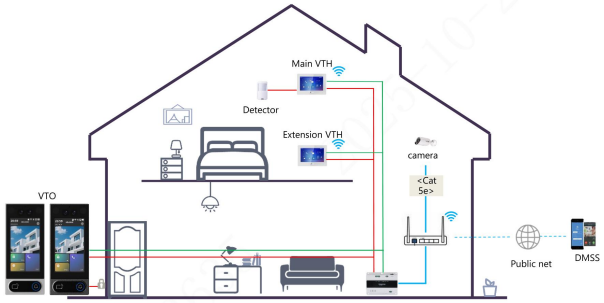

Rev 002.000 ©2026 Dahua. All rights reserved. Design and specifications are subject to change without notice.
Pictures in the document are for reference only, and the actual product shall prevail.