AudioCodes RX-PANEL Meeting Room Scheduler

Quick Guide

1. Product Introduction

Thank you for purchasing AudioCodes **RX-PANEL Meeting Room Scheduler**!

The AudioCodes RX-PANEL Meeting Room Scheduler is a purpose-built Microsoft Teams Panel with an intuitive touchscreen display.

Neatly installed right at the entrance to the meeting room, RX-PANEL's brightly colored status LED enables you to quickly see the meeting room's availability from a distance. You can also view the meeting details on its sleek and clear LCD screen and reserve a meeting room on the spot.

For more information on RX-PANEL, click here.



2. Shipped Items

Make sure you received the following items in the shipped box:

- ✓ RX-PANEL
- ✓ Ethernet cable – approximately 9 feet (~3m)
- ✓ 1 screw placement template (for wall mount)
- ✓ 4 screws and 4 wall anchors
- ✓ Mounting bracket and adhesive tape (for glass partition mount)
- ✓ 12V Power Adapter (AC 100-240V)
- ✓ Sticker label for an aesthetic glass surface mount

3. Mounting RX-PANEL

Position RX-PANEL at the entrance to a conference room. RX-PANEL can be mounted on a wall using screws, or it can be mounted on a glass surface using a mounting bracket and adhesive tape.

Mounting RX-PANEL on a Wall

Use the supplied template to mark locations for the 4 wall anchors. insert the 4 screws into the anchors and mount RX-PANEL.

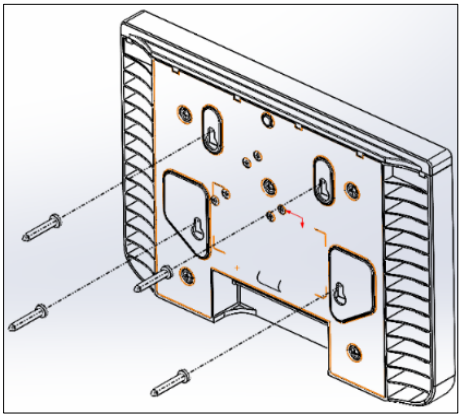

Mounting RX-PANEL on a Glass Surface

Make sure the surface is clean and dry.

Remove the bracket's adhesive strip liner, press the bracket firmly on the glass and hang RX-PANEL on it.

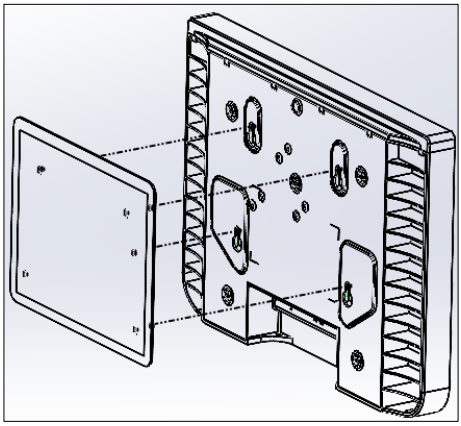

The device is suitable for mounting at a height no more than 6½ feet (~2m).

4. Creating an Aesthetic Glass Surface Mount

[Applies only when RX-PANEL is mounted on a glass surface]

After mounting RX-PANEL on a glass surface:

✓ Cover the view of RX-PANEL seen from inside the room, by sticking the supplied label on the glass surface.



5. Cabling RX-PANEL

The figure below shows RX-PANEL's connector ports.

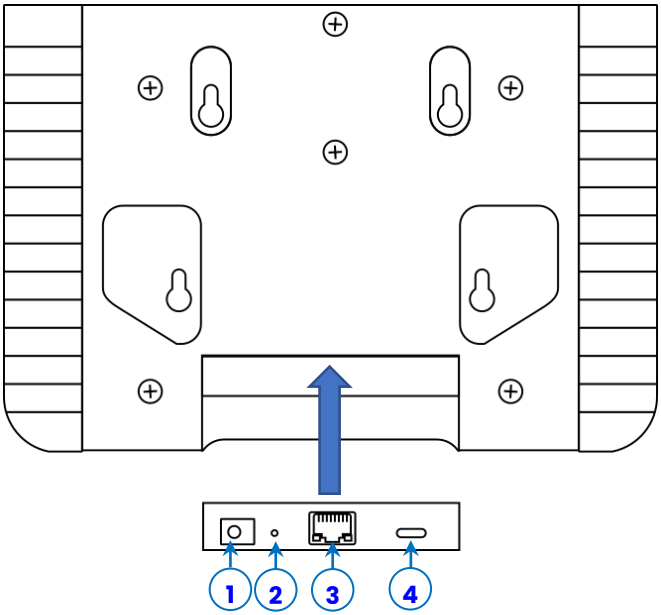

Port	Description
1	DC jack for 12V power adapter.
2	Reset (insert pin, unplug PoE, keep pin inserted, plug in PoE, keep pressing for 10 seconds).
3	Ethernet LAN/PoE GbE, RJ-45. **Note:** You can connect the Ethernet cable to the port directly from below, or route the cable through the cable tunnels located on either side of the RX-PANEL.
4	USB Type C connector (for maintenance purposes) (see the *User's & Administrator's Manual*).

6. Powering up

RX-PANEL can be powered by connecting RX-PANEL to the power adapter or connecting RX-PANEL LAN/PoE to any PoE Ethernet switch.

7. Managing RX-PANEL

RX-PANEL is managed by AudioCodes' One Voice Operations Center | Device Manager. It can also be managed by Microsoft Teams Admin Center (TAC). Management includes (but not limited to):

- ✓ Firmware management / upgrade
- ✓ Alarm management
- ✓ APK upgrade

8. Using RX-PANEL

Use the table below as reference to the following figure:



Item	Description
1	Space availability status LED, viewable from a distance: ■ **Green** indicates meeting space is available; optionally, reserve it right now. ■ **Red** or **purple** indicates meeting space unavailable. ■ **Flashing red** indicates a system status alert indicating, for example, recovery mode. ■ **Flashing green and blue** indicates restore to defaults.
2	Meeting details (meeting time, date, and organizer).
3	Meeting space availability status.
4	Press ('Back' button) to return to the previously accessed screen.
5	All meeting spaces and availability statuses.
6	Touch to reserve an available meeting space for an ad hoc meeting.
7	Touch to return to the home screen from any screen.
Note: The Admin can change the background wallpaper, color of status indicator, text contrast, etc.	

To enable advanced meeting functions:

1. Click the **Device Pairing** option in 'Teams Admin Settings' menu, and then select your device (to pair it at the Teams level):

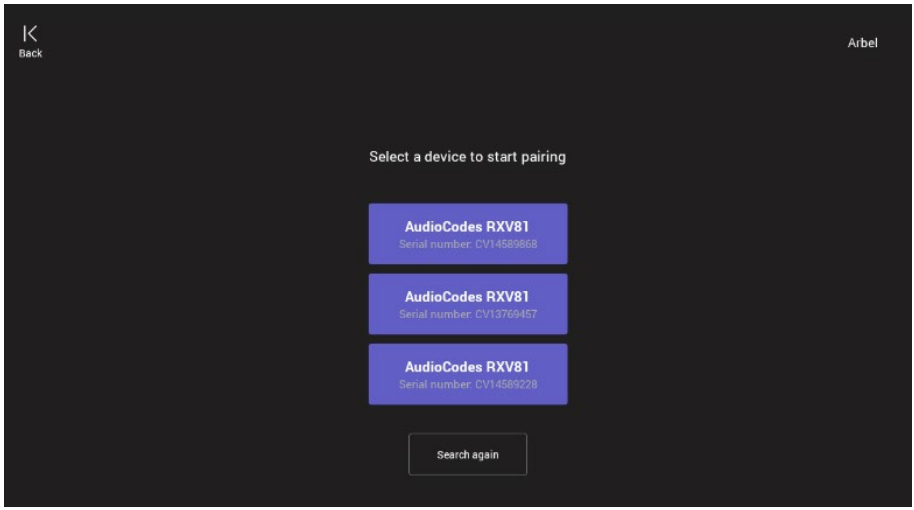

2. Select the **Wallpapers** option to choose a wallpaper.

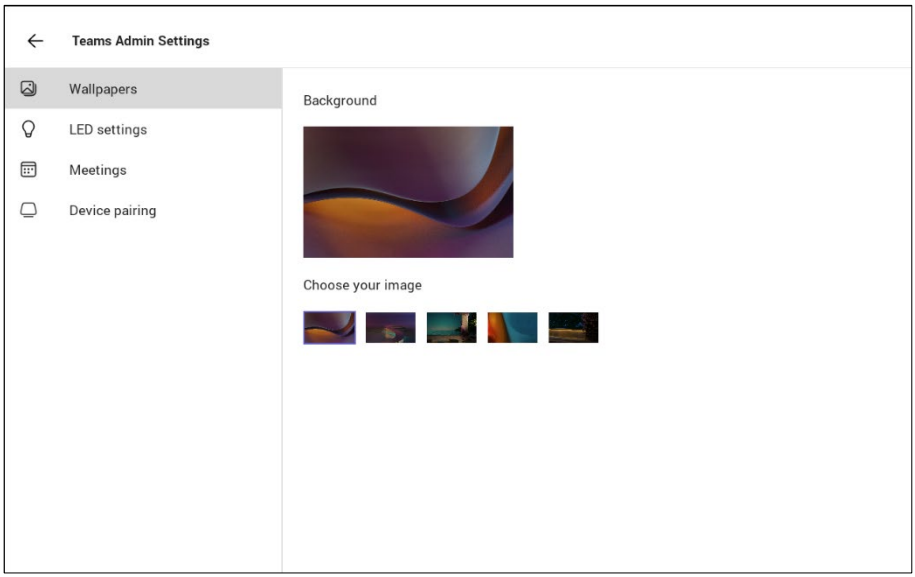

3. Select the **LED settings** option to choose the LED color for indicating a busy state.

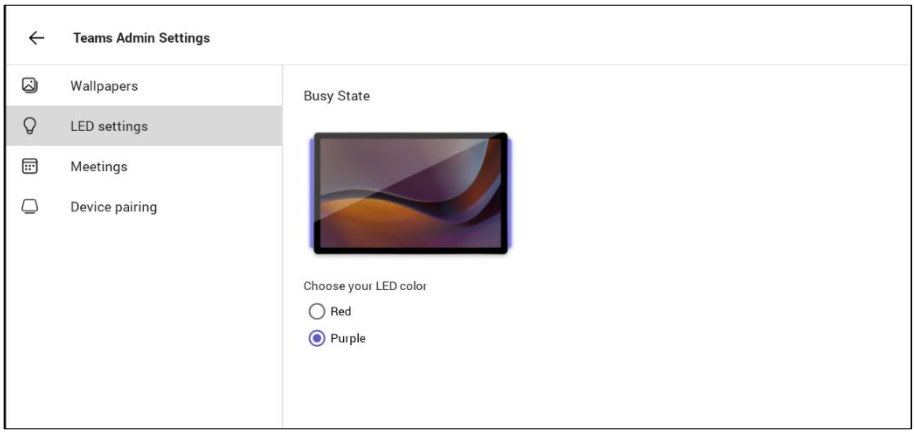

4. Select the **Meetings** option to define advanced meeting check-in functions.

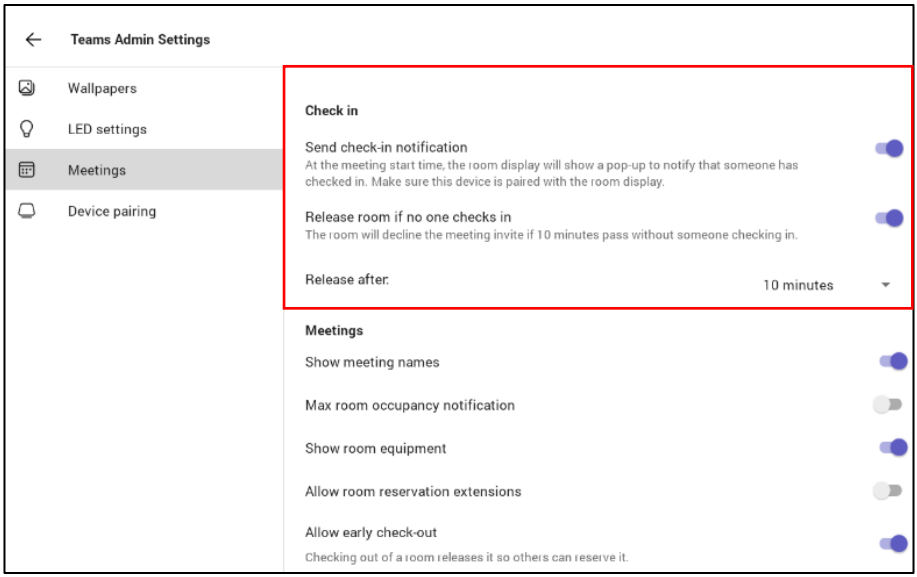

9. Specifications

For RX-PANEL technical specifications, see here.

FCC Caution

Any Changes or modifications not expressly approved by the party responsible for compliance could void the user's authority to operate the equipment. This device complies with part 15 of the FCC Rules. Operation is subject to the following two conditions: (1) This device may not cause harmful interference, and (2) this device must accept any interference received, including interference that may cause undesired operation.

FCC Radiation Exposure Statement

This equipment complies with FCC radiation exposure limits set forth for an uncontrolled environment. This equipment should be installed and operated with minimum distance 20cm between the radiator& your body. This transmitter and its antenna must not be co-located or operating in conjunction with any other antenna or transmitter.

Note: This equipment has been tested and found to comply with the limits for a Class B digital device, pursuant to part 15 of the FCC Rules. These limits are designed to provide reasonable protection against harmful interference in a residential installation. This equipment generates, uses and can radiate radio frequency energy and, if not installed and used in accordance with the instructions, may cause harmful interference to radio communications. However, there is no guarantee that interference will not occur in a particular installation. If this equipment does cause harmful interference to radio or television reception, which can be determined by turning the equipment off and on, the user is encouraged to try to correct the interference by one or more of the following measures:

- Reorient or relocate the receiving antenna.
- Increase the separation between the equipment and receiver.
- Connect the equipment into an outlet on a circuit different from that to which the receiver is connected.
- Consult the dealer or an experienced radio/TV technician for help.

FCC Warning

Prior to operating this device, refer to the device's Regulatory Information and FCC warnings.

International Headquarters
6 Ofra Haza Street
Naimi Park
Or Yehuda, 6032303, Israel
Tel: +972-3-976-4000
Fax: +972-3-976-4040

AudioCodes Inc.
80 Kingsbridge Rd
Piscataway, NJ 08854, USA
Tel: +1-732-469-0880
Fax: +1-732-469-2298

Contact us: https://www.audiocodes.com/corporate/offices-worldwide
Website: https://www.audiocodes.com/

©2026 AudioCodes Ltd. All rights reserved. AudioCodes, AC, HD VoIP, HD VoIP Sounds Better, IPmedia, Mediant, MediaPack, What's Inside Matters, OSN, SmartTAP, User Management Pack, VMAS, VoIPerfect, VoIPerfectHD, Your Gateway To VoIP, 3GX, AudioCodes One Voice, AudioCodes Meeting Insights and AudioCodes Room Experience are trademarks or registered trademarks of AudioCodes Limited. All other products or trademarks are property of their respective owners. Product specifications are subject to change without notice.

Notice Information

Information contained in this document is believed to be accurate and reliable at the time of publishing. However, due to ongoing product improvements and revisions, AudioCodes cannot guarantee accuracy of published material after the Date Published nor can it accept responsibility for errors or omissions. Updates to this document can be downloaded from https://www.audiocodes.com/library/technical-documents.

This document is subject to change without notice.

Date Published: August-17-2025

Document #: LTRT-18139